BILL OF MATERIAL				
SR.NO.	DESCRIPTION	MOC.	QTY.	SIZE
1	BASE	ABS	1	158 X 198 X 30
2	LID	ABS	1	158 X 198 X 30
3	HEAD SCREW	SS 304	8	M3 X 25LG.

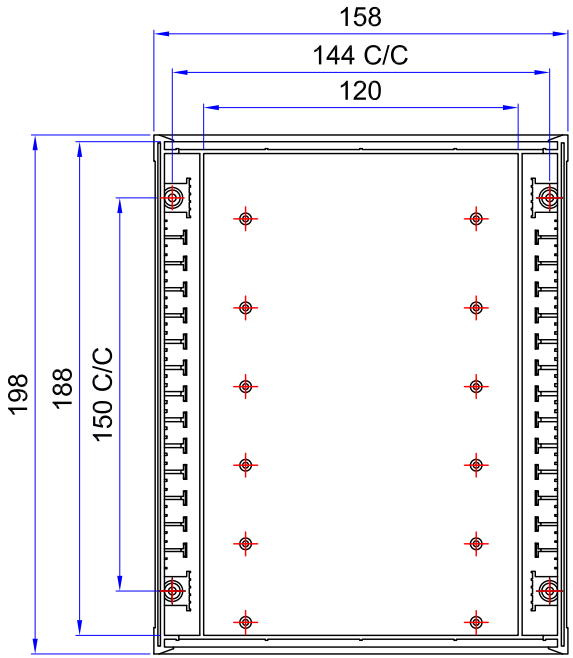

BASE

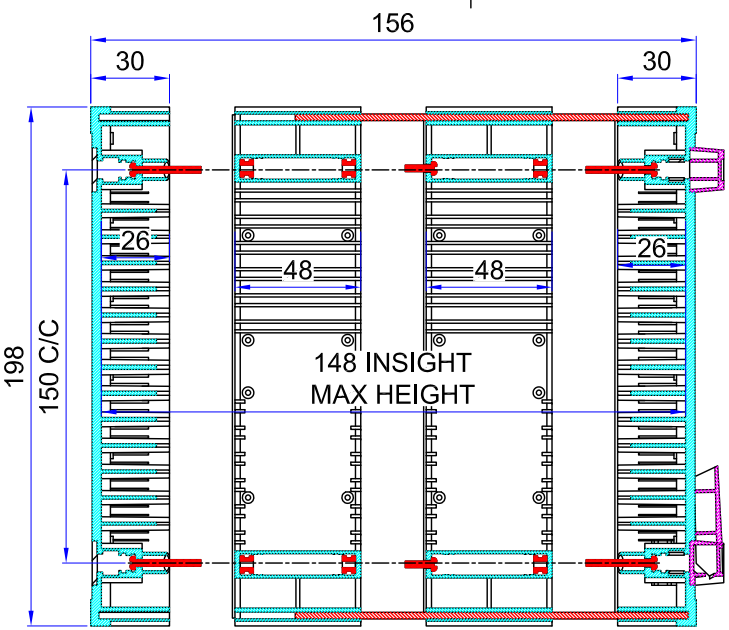

SECTION B-B

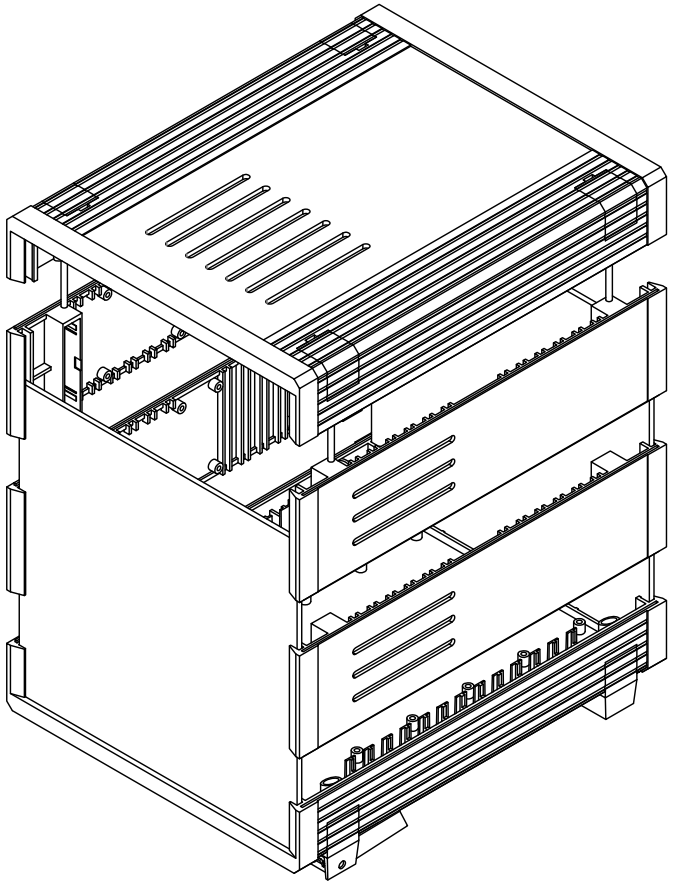

3D VIEW

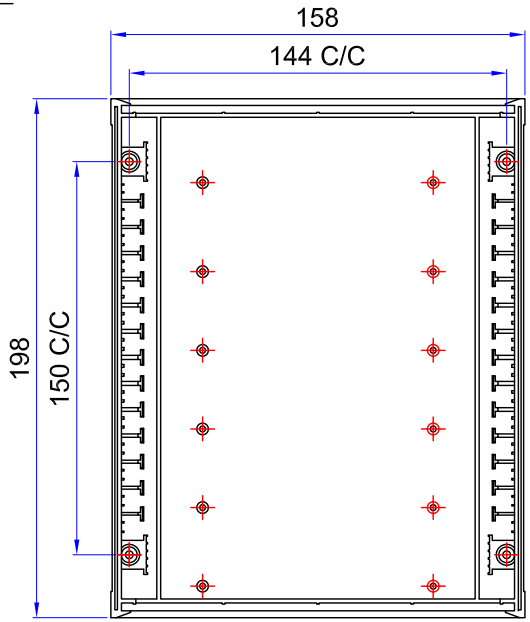

LID

NOTE :
1. ALL DIMENSION ARE IN MM

DRN.	PKW
CKD.	-
APD.	ST
SCALE	1:1
DIVISION	-
ALL DIMENSIONS ARE IN 'mm' UNLESS OTHERWISE SPECIFIED	

S.K. INSTRUMENT CABINET.

GROUP NO. 8/B, BLOCK NO.197/2979, AMAR SAHYOG C.H.S. LTD. NEAR OLD POST OFFICE, BEHIND YASHAWANT HOSPITAL, TAGOR NAGAR VIKHROLI (E), MUMBAI400083

PART NAME:
IP 65/ 66 ABS SK 15-32 H2 JUNCTION BOX

MODEL	SK 15-32 H2	MOC.	ABS		
MODEL.NO.	85	QTY.	01	WT.	0.52
DATE	01/09/2025	SHEET	01	OF	01
DRN.NO.	-				